User Manual
SKU: ABX00083

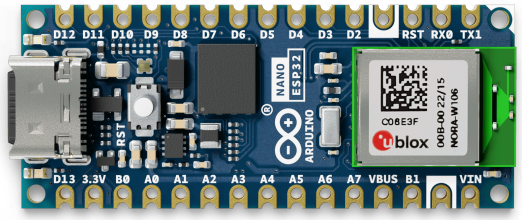

Description

The Arduino® Nano ESP32 (with and without headers) is a Nano form factor board based on the ESP32-S3 (embedded in the NORA-W106-10B from u-blox®). This is the first Arduino board to be based fully on an ESP32, and features Wi-Fi® as well as Bluetooth® LE.

The Nano ESP32 is compatible with the Arduino Cloud, and has support for MicroPython. It is an ideal board for getting started with IoT development.

Target areas:

Maker, IoT, MicroPython

Features

- **Xtensa® Dual-core 32-bit LX7 Microprocessor**
  - Up to 240 MHz
  - 384 kB ROM
  - 512 kB SRAM
  - 16 kB SRAM in RTC (low power mode)
  - DMA Controller
- **Power**
  - Operating voltage 3.3 V
  - VBUS supplies 5 V via USB-C® connector
  - VIN range is 6-21 V
- **Connectivity**
  - Wi-Fi®
  - Bluetooth® LE
  - Built-in antenna
  - 2.4 GHz transmitter/receiver
  - Up to 150 Mbps
- **Pins**
  - 14x digital (21x including analog)
  - 8x analog (available in RTC mode)
  - SPI(D11,D12,D13), I2C (A4/A5), UART(D0/D1)
- **Communication Ports**
  - SPI
  - I2C
  - I2S
  - UART
  - CAN (TWAI®)
- **Low Power**
  - 7 µA consumption in deep sleep mode*
  - 240 µA consumption in light sleep mode*
  - RTC Memory
  - Ultra Low Power (ULP) Coprocessor
  - Power Management Unit (PMU)
  - ADC in RTC mode

*The power consumption ratings listed in low power modes are only for the ESP32-S3 SoC. Other components on the board (such as LEDs), consumes power as well, which increases the overall power consumption of the board.

Contents

1 The Board **6**

1.1 Application Examples 6

2 ESP32 Core **6**

3 Recommended Operating Conditions **6**

4 Block Diagram **7**

5 Board Topology **8**

5.1 Front View 8

6 NORA-W106-10B (Radio Module / MCU) **9**

6.1 Xtensa® Dual-Core 32bit LX7 Microprocessor 9

6.2 Wi-Fi® 9

6.3 Bluetooth® 9

6.4 PSRAM 10

6.5 Antenna Gain 10

7 System **10**

7.1 Resets 10

7.2 Timers 11

7.3 Interrupts 11

8 Serial Communication Protocols **11**

8.1 Inter-Integrated Circuit (I2C) 11

8.2 Inter-IC Sound (I2S) 12

8.3 Serial Peripheral Interface (SPI) 12

8.4 Universal Asynchronous Receiver/Transmitter (UART) 12

8.5 Two Wire Automotive Interface (TWAI®) 13

9 External Flash Memory **13**

10 USB Connector **13**

11 Power Options **13**

11.1 Power Tree 14

11.2 Pin Voltage 14

11.3 VIN Rating 14

11.4 VBUS 15

11.5 Using the 3.3 V Pin 15

11.6 Pin Current 15

12 Pinout **15**

12.1 Analog (JP1) 17
12.2 Digital (JP2) 17
13 Mounting Holes And Board Outline 18
14 Board Operation 18
14.1 Getting Started - IDE 18
14.2 Getting Started - Arduino Cloud Editor 19
14.3 Getting Started - Arduino Cloud 19
14.4 Online Resources 19
14.5 Board Recovery 19
15 Declaration of Conformity CE DoC (EU) 19
16 Declaration of Conformity to EU RoHS & REACH 211 01/19/2021
17 Conflict Minerals Declaration 21
18 FCC Caution 21
19 SRRC 22
20 Company Information 22
21 Reference Documentation 23
22 Change Log 23
23 电路板简介
23.1 应用示例
24 ESP32 核心板
25 建议运行条件
26 方框图
27 电路板拓扑结构
27.1 前视图
28 NORA-W106-10B（无线电模块 / MCU）
28.1 Xtensa® 双核 32 位 LX7 微处理器
28.2 Wi-Fi® 29
28.3 Bluetooth® 29
28.4 PSRAM 30
28.5 天线增益
29 系统
29.1 复位
29.2 定时器
29.3 中断引脚
30 串行通信协议
30.1 集成电路总线 (I2C)

30.2 I2S总线 (I2S)
30.3 串行外设接口 (SPI)
30.4 通用异步接收器/发射器 (UART)
30.5 双线汽车接口 (TWAI®)
31 外部闪存
32 USB 连接器
33 电源选项
33.1 电源树
33.2 引脚电压
33.3 VIN 额定值
33.4 VBUS 34
33.5 使用 3.3 V 引脚
33.6 引脚电流
34 引脚布局
34.1 模拟引脚 (JP1)
34.2 数字引脚 (JP2)
35 安装孔和电路板外形图
36 电路板操作
36.1 入门指南 - IDE
36.2 入门指南 - Arduino Cloud Editor
36.3 入门指南 - Arduino Cloud
36.4 在线资源
36.5 电路板恢复
37 符合性声明 CE DoC（欧盟）
38 声明符合欧盟 RoHS 和 REACH 211 01/19/2021
39 冲突矿产声明
40 FCC 警告
41 SRRC 41
42 公司信息
43 参考资料
44 变更日志

1 The Board

Nano ESP32 is a 3.3 V development board based on the NORA-W106-10B from u-blox®, a module that includes a ESP32-S3 system on a chip (SoC). This module has support for Wi-Fi® and Bluetooth® Low Energy (LE), with amplified communication through a built-in antenna. The CPU (32-bit Xtensa® LX7) supports clock frequencies at up to 240 MHz.

1.1 Application Examples

Home automation: an ideal board for automating your home, and can be used for smart switches, automatic lighting and motor control for e.g. motor controlled blinds.

IoT sensors: with several dedicated ADC channels, accessible I2C/SPI buses and a robust ESP32-S3 based radio module, this board can easily be deployed to monitor sensor values.

Low power designs: create battery powered applications with low power consumption, utilising the built in low power modes of the ESP32-S3 SoC.

2 ESP32 Core

The Nano ESP32 uses the Arduino Board Package for ESP32 boards, a derivation of Espressif's arduino-esp32 core.

Rating

3 Recommended Operating Conditions

Symbol	Description	Min	Typ	Max	Unit
V_{IN}	Input voltage from VIN pad	6	7.0	21	V
V_{USB}	Input voltage from USB connector	4.8	5.0	5.5	V
$T_{ambient}$	Ambient Temperature	-40	25	105	°C

Functional Overview

4 Block Diagram

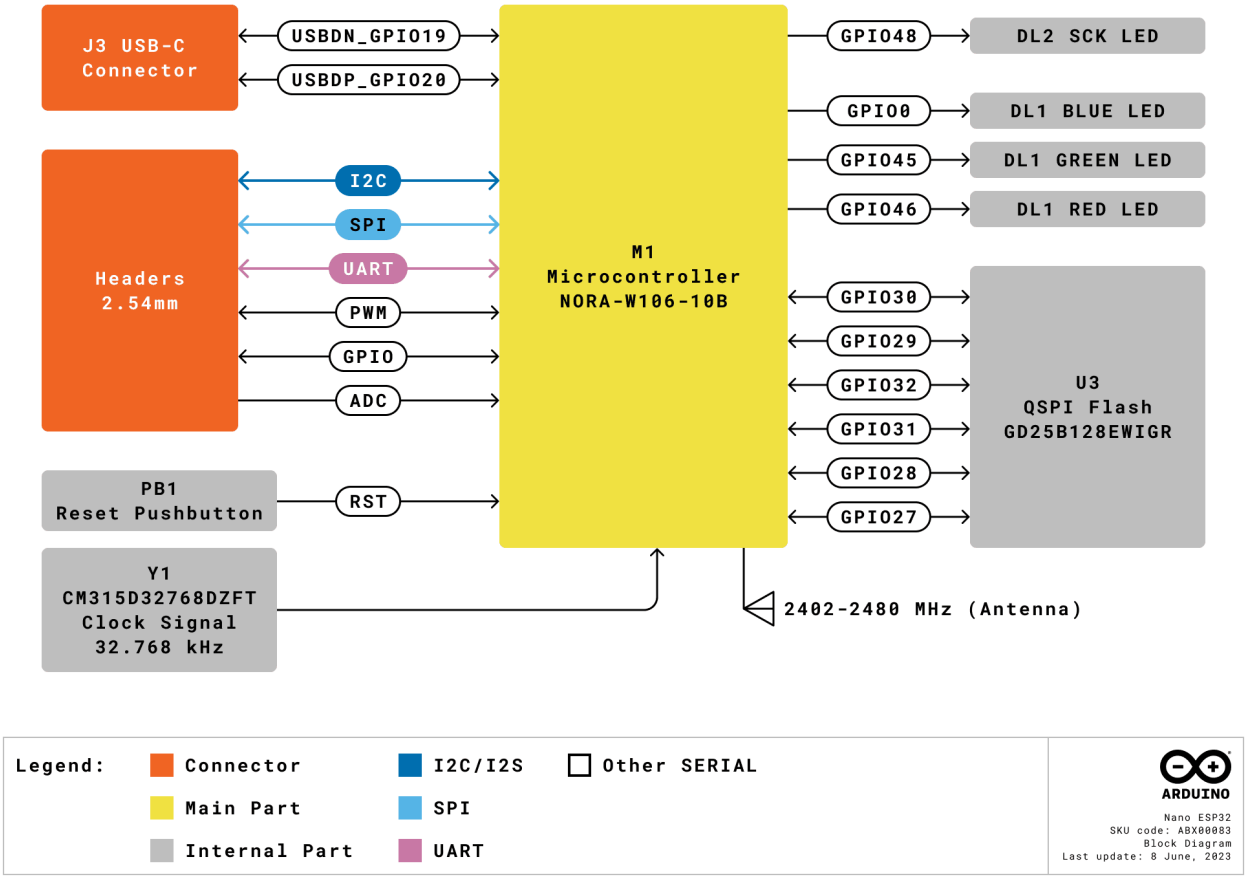

Arduino Nano ESP32 Block Diagram

5 Board Topology

5.1 Front View

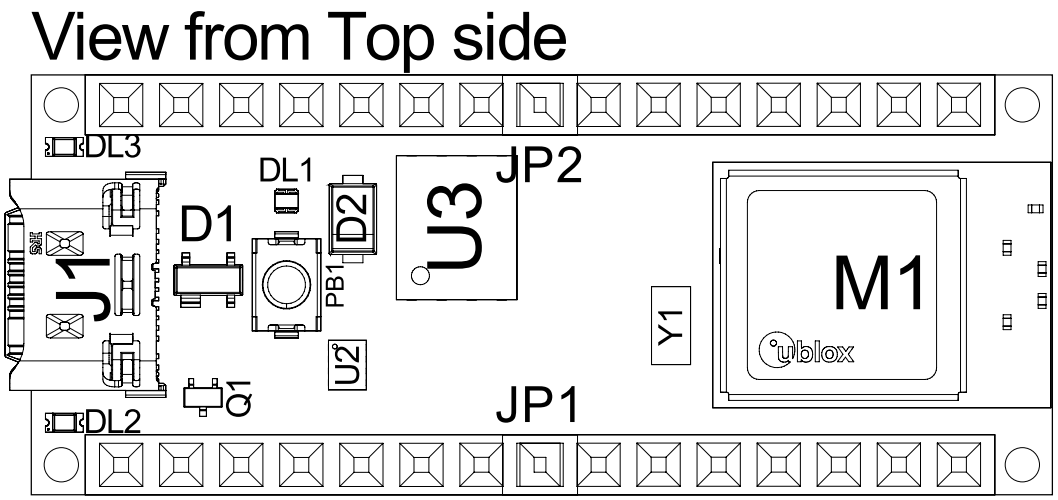

Top View of Arduino Nano ESP32

Ref.	Description
M1	NORA-W106-10B (ESP32-S3 SoC)
J1	CX90B-16P USB-C® connector
JP1	1x15 analog header
JP2	1x15 digital header
U2	MP2322GQH step down converter
U3	GD25B128EWIGR 128 Mbit (16 MB) ext. flash memory
DL1	RGB LED
DL2	LED SCK (serial clock)
DL3	LED Power (green)
D2	PMEG6020AELRX Schottky Diode
D3	PRTR5V0U2X,215 ESD Protection

6 NORA-W106-10B (Radio Module / MCU)

The Nano ESP32 features the **NORA-W106-10B** stand alone radio module, embedding an ESP32-S3 series SoC as well as an embedded antenna. The ESP32-S3 is based on an Xtensa® LX7 series microprocessor.

6.1 Xtensa® Dual-Core 32bit LX7 Microprocessor

The microprocessor for the ESP32-S3 SoC inside the NORA-W106 module is a dual-core 32-bit Xtensa® LX7. Each core can run at up to 240 MHz and has 512 kB SRAM memory. The LX7 features:

- 32-bit customized instruction set
- 128-bit data bus
- 32-bit multiplier / divider

The LX7 has a 384 kB ROM (Read Only Memory), and 512 kB of SRAM (Static Random Access Memory). It also features an 8 kB **RTC FAST** and **RTC SLOW** memory. These memories are designed for low-power operations, where the **SLOW** memory can be accessed by the ULP (Ulta Low Power) coprocessor, retaining the data in deep sleep mode.

6.2 Wi-Fi®

The NORA-W106-10B module supports the Wi-Fi® 4 IEEE 802.11 standards b/g/n, with an output power EIRP at up to 10 dBm. The max range for this module is 500 meters.

- 802.11b: 11 Mbit/s
- 802.11g: 54 Mbit/s
- 802.11n: 72 Mbit/s max at HT-20 (20 MHz), 150 Mbit/s max at HT-40 (40 MHz)

6.3 Bluetooth®

The NORA-W106-10B module supports Bluetooth® LE v5.0 with an output power EIRP at up to 10 dBm and data rates up to 2 Mbps. It has the option to scan and advertise simultaneously, as well as supporting multiple connections in peripheral/central mode.

6.4 PSRAM

The NORA-W106-10B module includes 8 MB of embedded PSRAM. (Octal SPI)

6.5 Antenna Gain

The built-in antenna on the NORA-W106-10B module uses GFSK modulation technique, with the performance ratings listed below:

Wi-Fi®:

- Typical conducted output power: **17 dBm.**
- Typical radiated output power: **20 dBm EIRP.**
- Conducted sensitivity: **-97 dBm**.

Bluetooth® Low Energy:

- Typical conducted output power: **7 dBm.**
- Typical radiated output power: **10 dBm EIRP.**
- Conducted sensitivity: **-98 dBm**.

This data is retrieved from the uBlox NORA-W10 data sheet (page 7, section 1.5) available here.

7 System

7.1 Resets

The ESP32-S3 has support for four levels of reset:

- **CPU:** resets CPU0/CPU1 core
- **Core:** resets the digital system, except for the RTC peripherals (ULP coprocessor, RTC memory).
- **System:** resets the entire digital system, including the RTC peripherals.
- **Chip:** resets the entire chip.

It is possible to conduct a software reset of this board, as well as obtaining the reset reason.

To do a hardware reset of the board, use the onboard reset button (PB1).

7.2 Timers

The Nano ESP32 has the following timers:

- 52-bit system timer with 2x 52-bit counters (16 MHz) and 3x comparators.
- 4x general-purpose 54-bit timers
- 3x watchdog timers, two in main system (MWDT0/1), one in the RTC module (RWDT).

7.3 Interrupts

All GPIOs on the Nano ESP32 can be configured to be used as interrupts, and is provided by an interrupt matrix. Interrupt pins are configured on an application level, using the following configurations:

- LOW
- HIGH
- CHANGE
- FALLING
- RISING

8 Serial Communication Protocols

The ESP32-S3 chip provides flexibility for the various serial protocols it supports. For example, the I2C bus can be assigned to almost any available GPIO.

8.1 Inter-Integrated Circuit (I2C)

Default pins:

- A4 - SDA
- A5 - SCL

The I2C bus is by default assigned to the A4/A5 (SDA/SCL) pins for retro compatibility. This pin assignment can however be changed, due to the flexibility of the ESP32-S3 chip.

The SDA and SCL pins can be assigned to most GPIOs, however some of these pins may have other essential functions that prevents I2C operations to run successfully.

Please note: many software libraries uses the standard pin assignment (A4/A5).

8.2 Inter-IC Sound (I2S)

There two I2S controllers that are typically used for communication with audio devices. There are no specific pins assigned for I2S, this can be used by any free GPIO.

Using standard or TDM mode, the following lines are used:

- **MCLK** - master clock
- **BCLK** - bit clock
- **WS** - word select
- **DIN/DOUT** - serial data

Using PDM mode:

- **CLK** - PDM clock
- **DIN/DOUT** serial data

Read more about the I2S protocol in Espressif's Peripheral API - InterIC Sounds (I2S)

8.3 Serial Peripheral Interface (SPI)

- SCK - D13
- CIPO - D12
- COPI - D11
- CS - D10

The SPI controller is by default assigned to the pins above.

8.4 Universal Asynchronous Receiver/Transmitter (UART)

- D1 / TX
- D0 / RX

The UART controller is by default assigned to the the pins above.

8.5 Two Wire Automotive Interface (TWAI®)

The CAN/TWAI® controller is used to communicate with systems using the CAN/TWAI® protocol, particularly common in the automotive industry. There are no specific pins assigned for the CAN/TWAI® controller, any free GPIO can be used.

Please note: TWAI® is also known as the CAN2.0B, or "CAN classic". The CAN controller is **NOT** compatible with CAN FD frames.

9 External Flash Memory

Nano ESP32 features a 128 Mbit (16 MB) external flash, the GD25B128EWIGR (U3). This memory is connected to the ESP32 via Quad Serial Peripheral Interface (QSPI).

The operating frequency for this IC is 133 MHz, and has a data transfer rate at up to 664 Mbit/s.

10 USB Connector

The Nano ESP32 has one USB-C® port, used to power and program your board as well as sending & receiving serial communication.

Note that you should not power the board with more than 5 V via the USB-C® port.

11 Power Options

Power can either be supplied via the VIN pin, or via USB-C® connector. Any voltage input either via USB or VIN is stepped down to 3.3 V using the MP2322GQH (U2) converter.

The operating voltage for this board is 3.3 V. Please note that there's no 5V pin available on this board, only the VBUS can provide 5 V when the board is powered via USB.

11.1 Power Tree

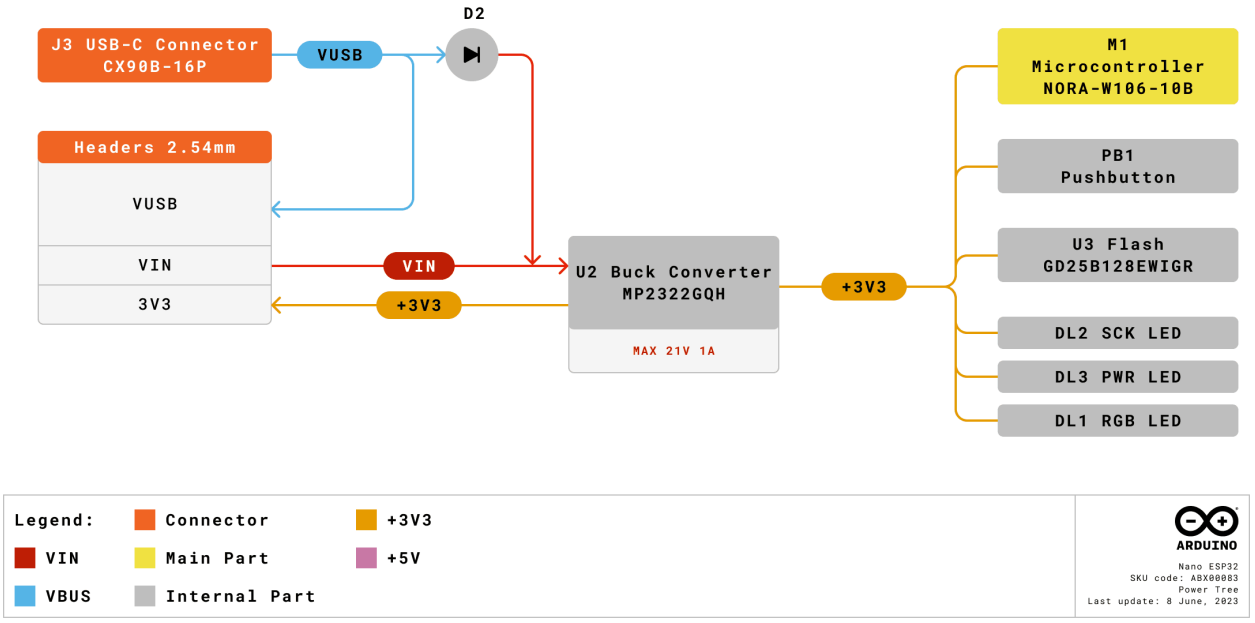

Arduino Nano ESP32 power tree.

11.2 Pin Voltage

All digital & analog pins on the Nano ESP32 are 3.3 V. Do not connect any higher voltage devices to any of the pins as it will risk damaging the board.

11.3 VIN Rating

The recommended input voltage range is **6-21 V**.

You should not attempt to power the board with a voltage outside the recommended range, particularly not higher than 21 V.

The efficiency of the converter depends on the input voltage via the VIN pin. See the average below for a board operation with normal current consumption:

- **4.5 V** - >90%.
- **12 V** - 85-90%
- **18 V** - <85%

This information is extracted from the MP2322GQH's datasheet.

11.4 VBUS

There is no 5V pin available on the Nano ESP32. 5 V can only be provided via the **VBUS**, which is supplied directly from the USB-C® power source.

While powering the board via the VIN pin, the VBUS pin is not activated. This means you have no option of providing 5 V from the board unless powered via USB or externally.

11.5 Using the 3.3 V Pin

The 3.3 V pin is connected to the 3.3 V rail which is connected to the output of the MP2322GQH step down converter. This pin is primarily used to power external components.

11.6 Pin Current

The GPIOs on the Nano ESP32 can handle **source currents** up to **40 mA**, and **sink currents** up to **28 mA**. Never connect devices that draw higher current directly to a GPIO.

Mechanical Information

12 Pinout

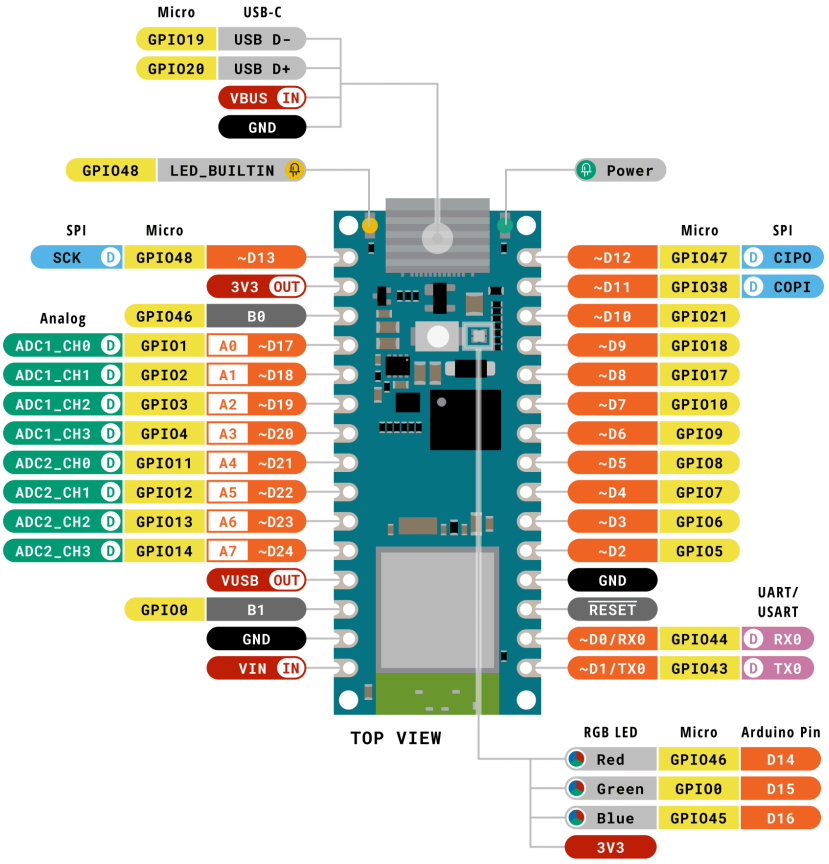

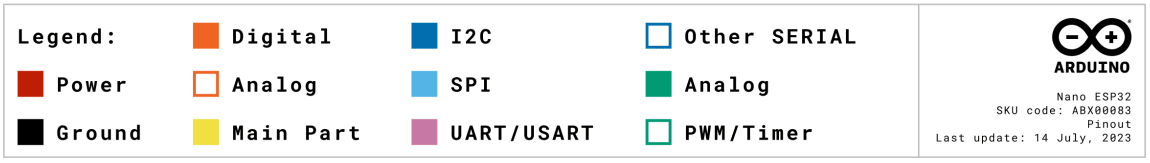

Pinout for Nano ESP32.

12.1 Analog (JP1)

Pin	Function	Type	Description
1	D13 / SCK	NC	Serial Clock
2	+3V3	Power	+3V3 Power Rail
3	BOOT0	Mode	Board Reset 0
4	A0	Analog	Analog input 0
5	A1	Analog	Analog input 1
6	A2	Analog	Analog input 2
7	A3	Analog	Analog input 3
8	A4	Analog	Analog input 4 / I²C Serial Datal (SDA)
9	A5	Analog	Analog input 5 / I²C Serial Clock (SCL)
10	A6	Analog	Analog input 6
11	A7	Analog	Analog input 7
12	VBUS	Power	USB power (5V)
13	BOOT1	Mode	Board Reset 1
14	GND	Power	Ground
15	VIN	Power	Voltage Input

12.2 Digital (JP2)

Pin	Function	Type	Description
1	D12 / CIPO*	Digital	Controller In Peripheral Out
2	D11 / COPI*	Digital	Controller Out Peripheral In
3	D10 / CS*	Digital	Chip Select
4	D9	Digital	Digital pin 9
5	D8	Digital	Digital pin 8
6	D7	Digital	Digital pin 7
7	D6	Digital	Digital pin 6
8	D5	Digital	Digital pin 5
9	D4	Digital	Digital pin 4
10	D3	Digital	Digital pin 3
11	D2	Digital	Digital pin 2
12	GND	Power	Ground
13	RST	Internal	Reset
14	D0/RX	Digital	Digital pin 1 / Serial Receiver (RX)
15	D1/TX	Digital	Digital pin 0 / Serial Transmitter (TX)

*CIPO/COPI/CS replaces the MISO/MOSI/SS terminology.

13 Mounting Holes And Board Outline

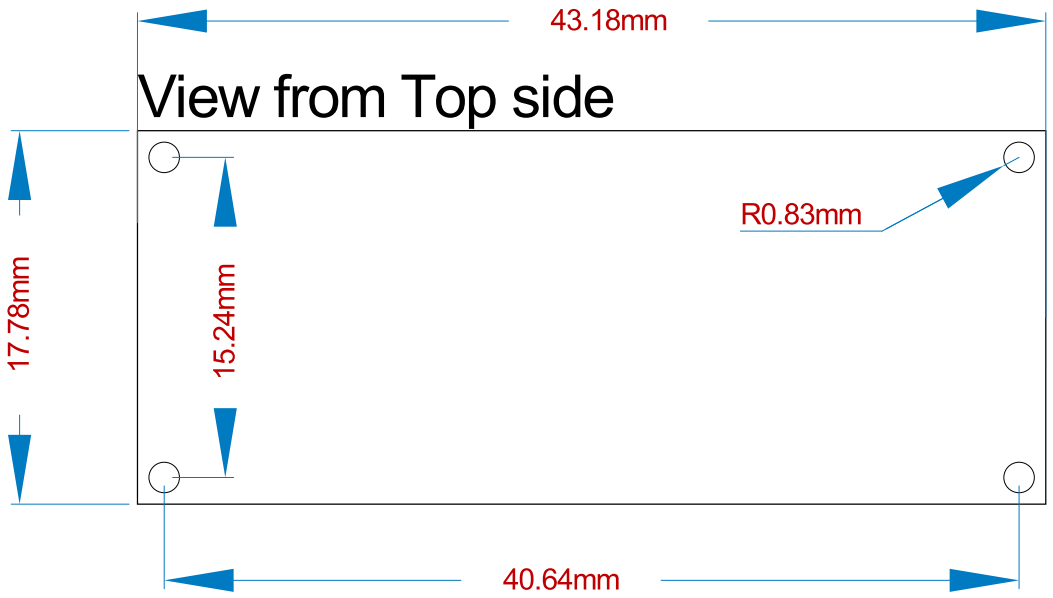

Mechanical View of Nano ESP32

14 Board Operation

14.1 Getting Started - IDE

If you want to program your Nano ESP32 while offline you need to install the Arduino IDE **[1]**. To connect the Nano ESP32 to your computer, you will need a Type-C® USB cable, which can also provide power to the board, as indicated by the LED (DL1).

14.2 Getting Started - Arduino Cloud Editor

All Arduino boards, including this one, work out-of-the-box on the Arduino Cloud Editor **[2]**, by just installing a simple plugin.

The Arduino Cloud Editor is hosted online, therefore it will always be up-to-date with the latest features and support for all boards. Follow **[3]** to start coding on the browser and upload your sketches onto your board.

14.3 Getting Started - Arduino Cloud

All Arduino IoT enabled products are supported on Arduino Cloud which allows you to log, graph and analyze sensor data, trigger events, and automate your home or business.

14.4 Online Resources

Now that you have gone through the basics of what you can do with the board you can explore the endless possibilities it provides by checking exciting projects on Arduino Project Hub **[4]**, the Arduino Library Reference **[5]**, and the online store **[6]**; where you will be able to complement your board with sensors, actuators and more.

14.5 Board Recovery

All Arduino boards have a built-in bootloader which allows flashing the board via USB. In case a sketch locks up the processor and the board is not reachable anymore via USB, it is possible to enter bootloader mode by double-tapping the reset button right after the power-up.

Certifications

15 Declaration of Conformity CE DoC (EU)

We declare under our sole responsibility that the products above are in conformity with the essential requirements of the following EU Directives and therefore qualify for free movement within markets comprising the European Union (EU) and European Economic Area (EEA).

16 Declaration of Conformity to EU RoHS & REACH 211 01/19/2021

Arduino boards are in compliance with RoHS 2 Directive 2011/65/EU of the European Parliament and RoHS 3 Directive 2015/863/EU of the Council of 4 June 2015 on the restriction of the use of certain hazardous substances in electrical and electronic equipment.

Substance	Maximum Limit (ppm)
Lead (Pb)	1000
Cadmium (Cd)	100
Mercury (Hg)	1000
Hexavalent Chromium (Cr6+)	1000
Poly Brominated Biphenyls (PBB)	1000
Poly Brominated Diphenyl ethers (PBDE)	1000
Bis(2-Ethylhexyl} phthalate (DEHP)	1000
Benzyl butyl phthalate (BBP)	1000
Dibutyl phthalate (DBP)	1000
Diisobutyl phthalate (DIBP)	1000

Exemptions : No exemptions are claimed.

Arduino Boards are fully compliant with the related requirements of European Union Regulation (EC) 1907 /2006 concerning the Registration, Evaluation, Authorization and Restriction of Chemicals (REACH). We declare none of the SVHCs (https://echa.europa.eu/web/guest/candidate-list-table), the Candidate List of Substances of Very High Concern for authorization currently released by ECHA, is present in all products (and also package) in quantities totaling in a concentration equal or above 0.1%. To the best of our knowledge, we also declare that our products do not contain any of the substances listed on the "Authorization List" (Annex XIV of the REACH regulations) and Substances of Very High Concern (SVHC) in any significant amounts as specified by the Annex XVII of Candidate list published by ECHA (European Chemical Agency) 1907 /2006/EC.

17 Conflict Minerals Declaration

As a global supplier of electronic and electrical components, Arduino is aware of our obligations with regards to laws and regulations regarding Conflict Minerals, specifically the Dodd-Frank Wall Street Reform and Consumer Protection Act, Section 1502. Arduino does not directly source or process conflict minerals such as Tin, Tantalum, Tungsten, or Gold. Conflict minerals are contained in our products in the form of solder, or as a component in metal alloys. As part of our reasonable due diligence Arduino has contacted component suppliers within our supply chain to verify their continued compliance with the regulations. Based on the information received thus far we declare that our products contain Conflict Minerals sourced from conflict-free areas.

18 FCC Caution

Any Changes or modifications not expressly approved by the party responsible for compliance could void the user's authority to operate the equipment.

This device complies with part 15 of the FCC Rules. Operation is subject to the following two conditions:

(1) This device may not cause harmful interference

(2) this device must accept any interference received, including interference that may cause undesired operation.

FCC RF Radiation Exposure Statement:

1. This Transmitter must not be co-located or operating in conjunction with any other antenna or transmitter.
2. This equipment complies with RF radiation exposure limits set forth for an uncontrolled environment.
3. This equipment should be installed and operated with a minimum distance of 20 cm between the radiator & your body.

Note: This equipment has been tested and found to comply with the limits for a Class B digital device, pursuant to part 15 of the FCC Rules. These limits are designed to provide reasonable protection against harmful interference in a residential installation. This equipment generates, uses and can radiate radio frequency energy and, if not installed and used in accordance with the instructions, may cause harmful interference to radio communications. However, there is no guarantee that interference will not occur in a particular installation. If this equipment does cause harmful interference to radio or television reception, which can be determined by turning the equipment off and on, the user is encouraged to try to correct the interference by one or more of the following measures:

- Reorient or relocate the receiving antenna.
- Increase the separation between the equipment and receiver.
- Connect the equipment into an outlet on a circuit different from that to which the receiver is connected.
- Consult the dealer or an experienced radio/TV technician for help.

English: User manuals for licence-exempt radio apparatus shall contain the following or equivalent notice in a conspicuous location in the user manual or alternatively on the device or both. This device complies with Industry Canada licence-exempt RSS standard(s). Operation is subject to the following two conditions:

(1) this device may not cause interference

(2) this device must accept any interference, including interference that may cause undesired operation of the device.

French: Le présent appareil est conforme aux CNR d'Industrie Canada applicables aux appareils radio exempts de licence. L'exploitation est autorisée aux deux conditions suivantes :

(1) l' appareil nedoit pas produire de brouillage

(2) l'utilisateur de l'appareil doit accepter tout brouillage radioélectrique subi, même si le brouillage est susceptible d'en compromettre le fonctionnement.

IC SAR Warning:

English This equipment should be installed and operated with a minimum distance of 20 cm between the radiator and your body.

French: Lors de l' installation et de l' exploitation de ce dispositif, la distance entre le radiateur et le corps est d 'au moins 20 cm.

Important: The operating temperature of the EUT can't exceed 85℃ and shouldn't be lower than -40 ℃.

Hereby, Arduino S.r.l. declares that this product is in compliance with essential requirements and other relevant provisions of Directive 201453/EU. This product is allowed to be used in all EU member states.

19 SRRC

This equipment contains a radio transmitter module with model approval code: CMIIT ID: 24J993CLD252.

20 Company Information

Company name	Arduino S.r.l.
Company Address	Via Andrea Appiani, 25 Monza, MB, 20900 Italy

21 Reference Documentation

Reference	Link
Arduino IDE (Desktop)	https://www.arduino.cc/en/Main/Software
Arduino Cloud Editor	https://create.arduino.cc/editor
Arduino Cloud Editor - Getting Started	https://docs.arduino.cc/arduino-cloud/guides/editor/
Arduino Project Hub	https://create.arduino.cc/projecthub?by=part&part_id=11332&sort=trending
Library Reference	https://github.com/arduino-libraries/
Online Store	https://store.arduino.cc/

22 Change Log

Date	Changes
08/06/2023	Release
09/01/2023	Update power tree flowchart.
09/11/2023	Update SPI section, update analog/digital pin section.
11/06/2023	Correct company name, correct VBUS/VUSB
11/09/2023	Block Diagram Update, Antenna Specifications
11/15/2023	Ambient temperature update
11/23/2023	Added label to LP modes
23/02/2024	Added antenna frequency to block diagram
25/04/2024	Updated link to new Cloud Editor
23/08/2024	Added SRRC certification
23/08/2024	Cloud Editor updated from Web Editor

中文（ZH）

描述

Arduino Nano ESP32（带和不带接头）是基于 ESP32-S3（嵌入 u-blox® 的 NORA-W106-10B 中）的 Nano 开发板。这是第一款完全基于 ESP32 的 Arduino 电路板，具有 Wi-Fi® 和 Bluetooth® LE 功能。

Nano ESP32 兼容 Arduino Cloud，并支持 MicroPython。它是物联网开发入门的理想板卡。

目标领域：

创客、物联网、MicroPython

特点

- **Xtensa® 双核 32 位 LX7 微处理器**
  - 工作频率高达 240 MHz
  - 384 kB ROM
  - 512 kB SRAM
  - RTC 采用 16 kB SRAM （低功耗模式）
  - DMA 控制器
- **电源**
  - 工作电压 3.3 V
  - VBUS 通过 USB-C® 连接器提供 5 V 电压
  - 输入电压范围为 6-21 V
- **连接选项**
  - Wi-Fi®
  - Bluetooth® LE
  - 内置天线
  - 2.4 GHz 发射器/接收器
  - 传输速率高达 150 Mbps
- **引脚**
  - 14 个数字引脚（21 个引脚，含模拟引脚）
  - 8 个模拟引脚（在 RTC 模式下可用）
  - SPI(D11,D12,D13)、I2C (A4/A5)、UART(D0/D1)
- **通信端口**
  - SPI
  - I2C
  - I2S
  - UART

  - CAN (TWAI®)
- **低功耗**
  - 在深度休眠模式下功耗为 7 μA*
  - 在浅度休眠模式下功耗为 240 μA*
  - RTC 存储器
  - 超低功耗（ULP）协处理器
  - 电源管理单元（PMU）
  - 在 RTC 模式下支持 ADC

*低功耗模式下的额定功耗仅适用于 ESP32-S3 SoC。电路板上的其他元件（如 LED）也会产生功耗，从而增加电路板的总功耗。

目录

23 电路板简介

Nano ESP32 是一款基于 u-blox® NORA-W106-10B 的 3.3 V 开发板，该模块包含一个 ESP32-S3 片上系统 (SoC)。该模块支持 Wi-Fi® 和 Bluetooth® Low Energy (LE)，通过内置天线支持扩频通信。CPU（32 位 Xtensa® LX7）支持高达 240 MHz 的时钟频率。

23.1 应用示例

智能家居: 协助实现智能家居/家庭自动化的理想板卡，可用于智能开关、自动照明和电机控制，例如电动百叶窗。

物联网传感器: 该电路板具有多个专用模数转换器通道、可访问的 I2C/SPI 总线和基于 ESP32-S3 的强大无线电模块，可轻松部署用于监控传感器值。

低功耗设计: 利用 ESP32-S3 SoC 的内置低功耗模式，实现低功耗的电池供电应用。

24 ESP32 核心板

Nano ESP32 采用Arduino ESP32 电路板封装, 是 Espressif arduino-esp32 核心板的衍生板。

额定值

25 建议运行条件

符号	描述	最小值	典型值	最大值	单位
V_{IN}	来自 VIN 焊盘的输入电压	6	7.0	21	V
V_{USB}	来自 USB 连接器的输入电压	4.8	5.0	5.5	V
$T_{ambient}$	环境温度	-40	25	105	°C

功能概述

26 方框图

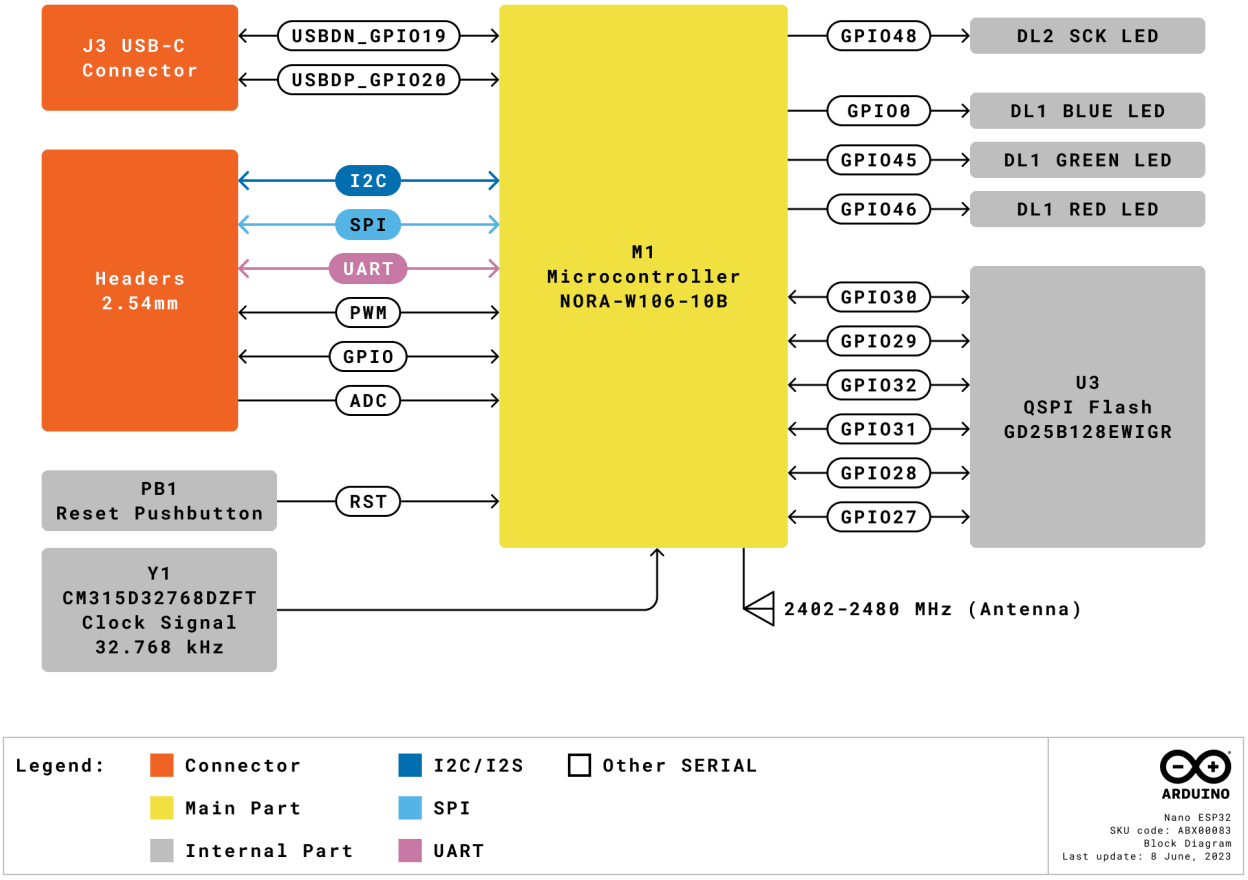

Arduino Nano ESP32 方框图

27 电路板拓扑结构

27.1 前视图

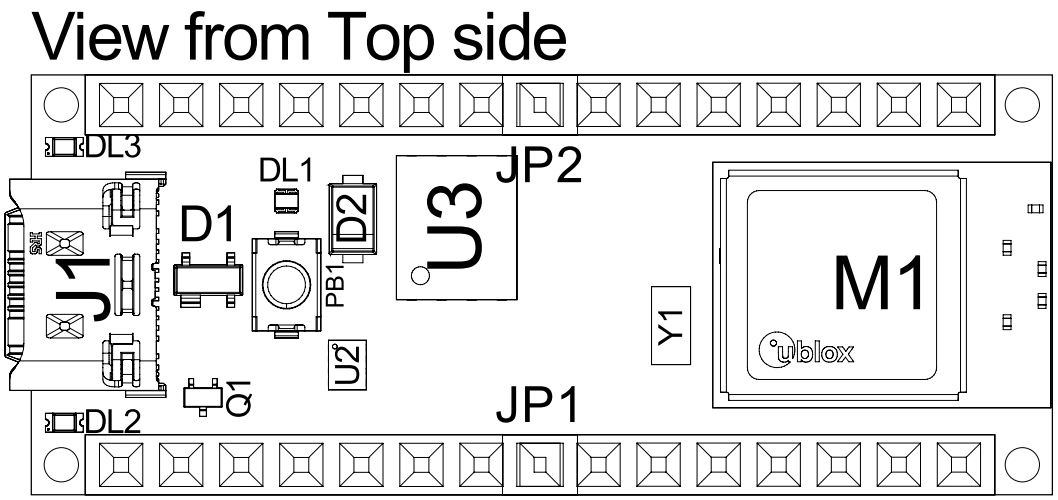

Arduino Nano ESP32 俯视图

编号	描述
M1	NORA-W106-10B (ESP32-S3 SoC)
J1	CX90B-16P USB-C® 连接器
JP1	1x15 模拟接头
JP2	1x15 数字接头
U2	MP2322GQH 降压转换器
U3	GD25B128EWIGR 128 Mbit (16 MB) 外部闪存
DL1	RGB LED
DL2	LED SCK （串行时钟）
DL3	LED Power（绿色）
D2	PMEG6020AELRX 肖特基二极管
D3	PRTR5V0U2X，215 ESD保护

28 NORA-W106-10B（无线电模块 / MCU）

Nano ESP32 采用 **NORA-W106-10B** 独立无线电模块，内嵌 ESP32-S3 系列 SoC 和嵌入式天线。ESP32-S3 基于 Xtensa® LX7 系列微处理器。

28.1 Xtensa® 双核 32 位 LX7 微处理器

NORA-W106 模块内 ESP32-S3 SoC 的微处理器是双核 32 位 Xtensa® LX7。每个内核的运行频率最高可达 240 MHz，拥有 512 kB SRAM 内存。LX7 具有以下特点：

- 32 位自定义指令集
- 128 位数据总线
- 32 位乘法器/除法器

LX7 具有 384 kB ROM（只读存储器）和 512 kB SRAM（静态随机存取存储器）。还具有 8 kB **RTC FAST** 和 **RTC SLOW** 存储器。这些存储器专为低功耗操作而设计，其中 ULP（超低功耗）协处理器可以访问 **SLOW** 存储器，并在深度休眠模式下保留数据。

28.2 Wi-Fi®

NORA-W106-10B 模块支持 Wi-Fi® 4 IEEE 802.11 标准 b/g/n，输出功率 EIRP 高达 10 dBm。此模块的最大范围是 500 米。

- 802.11b: 11 Mbit/s
- 802.11g: 54 Mbit/s
- 802.11n：HT-20 (20 Mhz)，最大值为 72 Mbit/s；HT-40 (40 Mhz)，最大值为 150 Mbit/s

28.3 Bluetooth®

NORA-W106-10B 模块支持 Bluetooth® LE v5.0，输出功率 EIRP 高达 10 dBm，数据传输速率高达 2 Mbps。它可以选择同时扫描和发布，并在外设/中央模式下支持多种连接。

28.4 PSRAM

NORA-W106-10B 模块包括 8 MB 嵌入式 PSRAM。(八进制 SPI)

28.5 天线增益

NORA-W106-10B 模块上的内置天线采用 GFSK 调制技术，性能额定值如下：

Wi-Fi®:

- 传导输出功率典型值：**17 dBm**。
- 辐射输出功率典型值：**20 dBm EIRP**。
- 传导灵敏度：**-97 dBm**。

Bluetooth® Low Energy：

- 传导输出功率典型值：**7 dBm**。
- 辐射输出功率典型值：**10 dBm EIRP**。
- 传导灵敏度：**-98 dBm**。

该数据检索自 uBlox NORA-W10 数据表（第 7 页，第 1.5 节），可在此处 访问数据表。

29 系统

29.1 复位

ESP32-S3 支持四级复位：

- **CPU:** 复位 CPU0/CPU1 内核。
- **内核:** 复位数字系统，RTC 外设（ULP 协处理器、RTC 存储器）除外。
- **系统:** 复位整个数字系统，包括 RTC 外设。
- **芯片:**复位整个芯片。

可以对该电路板进行软件复位，并获得复位原因。

要对电路板进行硬件复位，请使用板载复位按钮 (PB1)。

29.2 定时器

Nano ESP32 具有以下定时器：

- 52 位系统定时器和 2 个 52 位计数器 (16 MHz) 以及 3 个比较器。
- 4 个通用 54 位定时器
- 3 个看门狗定时器，两个在主系统中 (MWDT0/1)，一个在 RTC 模块中 (RWDT)。

29.3 中断引脚

Nano ESP32 上的所有 GPIO 均可配置用作中断引脚，并按中断引脚矩阵配置。中断引脚在应用层上使用以下配置进行配置：

- LOW
- HIGH
- CHANGE
- FALLING
- RISING

30 串行通信协议

ESP32-S3 芯片为其支持的各种串行协议提供了灵活性。例如，I2C 总线几乎可以分配给任何可用的 GPIO。

30.1 集成电路总线 (I2C)

默认引脚：

- A4 - SDA
- A5 - SCL

I2C 总线默认分配给 A4/A5（SDA/SCL）引脚，以实现与旧版的兼容性。不过，由于 ESP32-S3 芯片具备灵活性，该引脚分配可以更改。

SDA 和 SCL 引脚可分配给大多数 GPIO，但其中一些引脚可能具有其他基本功能，导致 I2C 操作无法成功运行。

请注意：许多软件库使用标准引脚分配（A4/A5）。

30.2 I2S总线 (I2S)

有两个 I2S 控制器通常用于与音频设备通信。没有为 I2S 分配特定的引脚，可以使用任何空闲的 GPIO。

使用标准或 TDM 模式时，使用以下线路：

- **MCLK** - 主时钟
- **BCLK** - 位时钟
- **WS** - 字选择线
- **DIN/DOUT** - 串行数据

使用 PDM 模式：

- **CLK** - PDM 时钟
- **DIN/DOUT** 串行数据

在 Espressif 的 Peripheral API - InterIC Sounds (I2S) 中了解更多有关 I2S 协议的信息

30.3 串行外设接口 (SPI)

- SCK - D13
- CIPO - D12
- COPI - D11
- CS - D10

默认情况下，SPI 控制器分配给上述引脚。

30.4 通用异步接收器/发射器 (UART)

- D1 / TX
- D0 / RX

默认情况下，UART 控制器分配给上述引脚。

30.5 双线汽车接口 (TWAI®)

CAN/TWAI® 控制器用于与使用 CAN/TWAI® 协议的系统进行通信，这在汽车行业尤为常见。没有为 CAN/TWAI® 控制器分配特定的引脚，可以使用任何空闲的 GPIO。

请注意: TWAI® 也称为 CAN2.0B，或“CAN classic”。CAN 控制器与 CAN FD 框架**不**兼容。

31 外部闪存

Nano ESP32 具有 128 Mbit (16 MB) 外部闪存 GD25B128EWIGR (U3)。该存储器通过四线串行外设接口 (QSPI) 与 ESP32 连接。

该集成电路的工作频率为 133 MHz，数据传输速率高达 664 Mbit/s。

32 USB 连接器

Nano ESP32 有一个 USB-C® 端口，用于为电路板供电和编程，以及发送和接收串行通信。

注意：请勿通过 USB-C® 端口以超过 5V 的电压为电路板供电。

33 电源选项

可通过 VIN 引脚或 USB-C® 连接器提供电源。通过 USB 或 VIN 输入的任何电压都会通过 MP2322GQH (U2) 转换器降压至 3.3 V。

该电路板的工作电压为 3.3 V。请注意，该电路板上未提供 5V 引脚，当通过 USB 为电路板供电时，只有 VBUS 可以提供 5 V 电压。

33.1 电源树

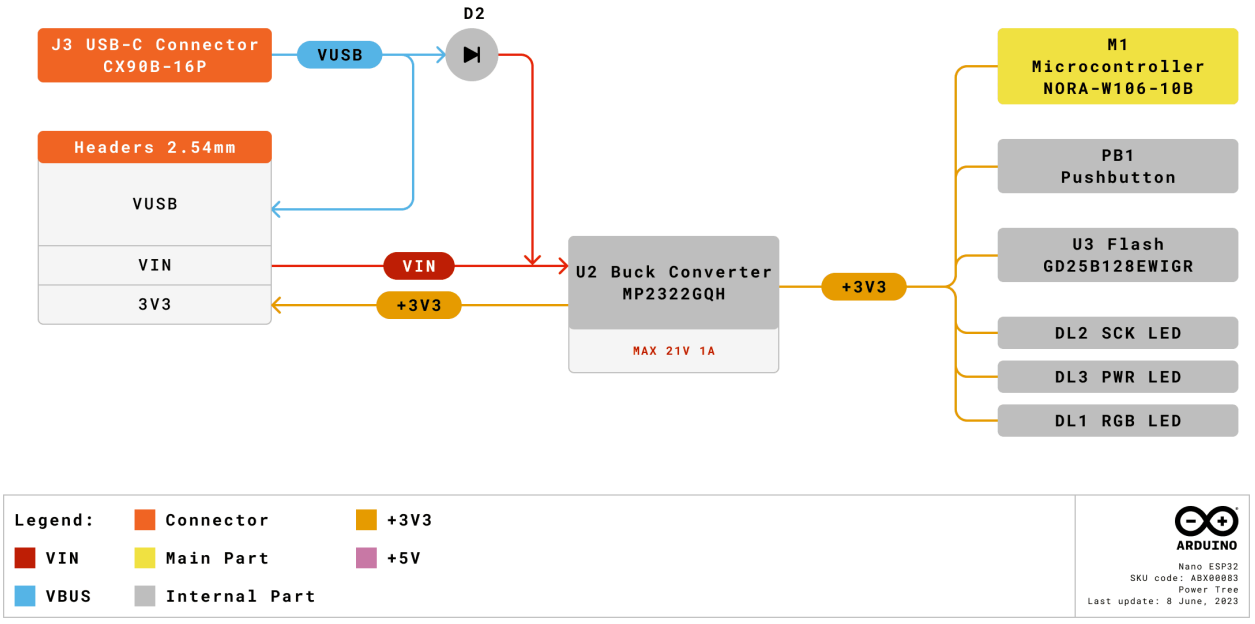

Arduino Nano ESP32 电源树

33.2 引脚电压

Nano ESP32 的所有数字和模拟引脚电压均为 3.3 V。请勿将任何电压较高的设备连接到任何引脚上，否则有可能损坏电路板。

33.3 VIN 额定值

建议输入电压范围为 **6-21 V**。

请勿尝试使用超出建议范围的电压为电路板供电，尤其不要高于 21 V。

转换器的效率取决于通过 VIN 引脚输入的电压。电路板在正常电流消耗下运行时的平均值如下:

- **4.5 V** - >90%.
- **12 V** - 85-90%
- **18 V** - <85%

此信息摘自 MP2322GQH 的数据表。

33.4 VBUS

Nano ESP32 上未提供 5V 引脚。5 V 电压只能通过 **VBUS**提供，由 USB-C® 电源直接提供。

通过 VIN 引脚为电路板供电时，VBUS 引脚未启用。这意味着，除非通过 USB 或外部电源供电，否则无法从电路板提供 5 V 电压。

33.5 使用 3.3 V 引脚

3.3 V 引脚与 3.3 V 电源轨相连，而 3.3 V 电源轨则与 MP2322GQH 降压转换器的输出相连。该引脚主要用于为外部元件供电。

33.6 引脚电流

Nano ESP32 上的 GPIO 可处理的**源电流**最高达**40 mA**，**灌电流**最高达**28 mA**。切勿将电流高于上述上限值的设备直接连接到 GPIO。

机械层信息

34 引脚布局

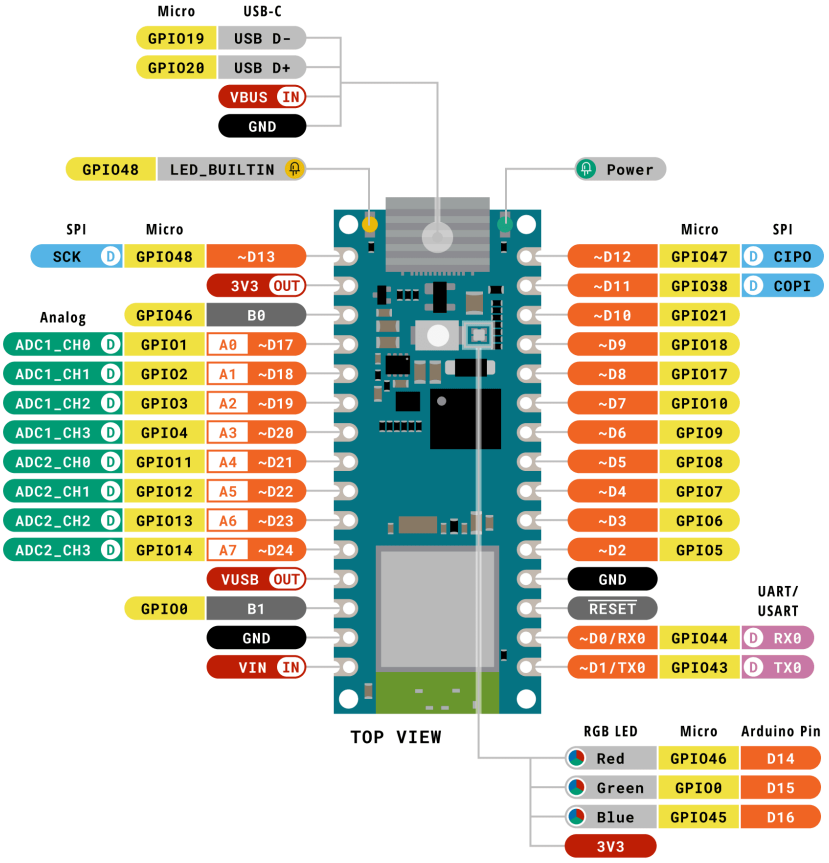

Nano ESP32 引脚布局。

34.1 模拟引脚 （JP1）

引脚	功能	类型	描述
1	D13 / SCK	NC	串行时钟
2	+3V3	电源	+3V3 电源轨
3	BOOT0	模式	电路板复位 0
4	A0	模拟	模拟输入 0
5	A1	模拟	模拟输入 1
6	A2	模拟	模拟输入 2
7	A3	模拟	模拟输入 3
8	A4	模拟	模拟输入 4 / I2C 串行数据（SDA）
9	A5	模拟	模拟输入 5 / I2C 串行时钟（SCL）
10	A6	模拟	模拟输入 6
11	A7	模拟	模拟输入 7
12	VBUS	电源	USB 电源 (5V)
13	BOOT1	模式	电路板复位 1
14	GND	电源	接地
15	VIN	电源	电压输入

34.2 数字引脚 （JP2）

引脚	功能	类型	描述
1	D12 / CIPO*	数字	控制器输入外设输出
2	D11 / COPI*	数字	控制器输出外设输入
3	D10 / CS*	数字	芯片选择
4	D9	数字	数字引脚 9
5	D8	数字	数字引脚 8
6	D7	数字	数字引脚 7
7	D6	数字	数字引脚 6
8	D5	数字	数字引脚 5
9	D4	数字	数字引脚 4
10	D3	数字	数字引脚 3
11	D2	数字	数字引脚 2
12	GND	电源	接地
13	RST	内部	复位
14	D0/RX	数字	数字引脚 1 /串行接收器 (RX)
15	D1/TX	数字	数字引脚 0 / 串行发射器 (TX)

*CIPO/COPI/CS 取代 MISO/MOSI/SS 术语。

35 安装孔和电路板外形图

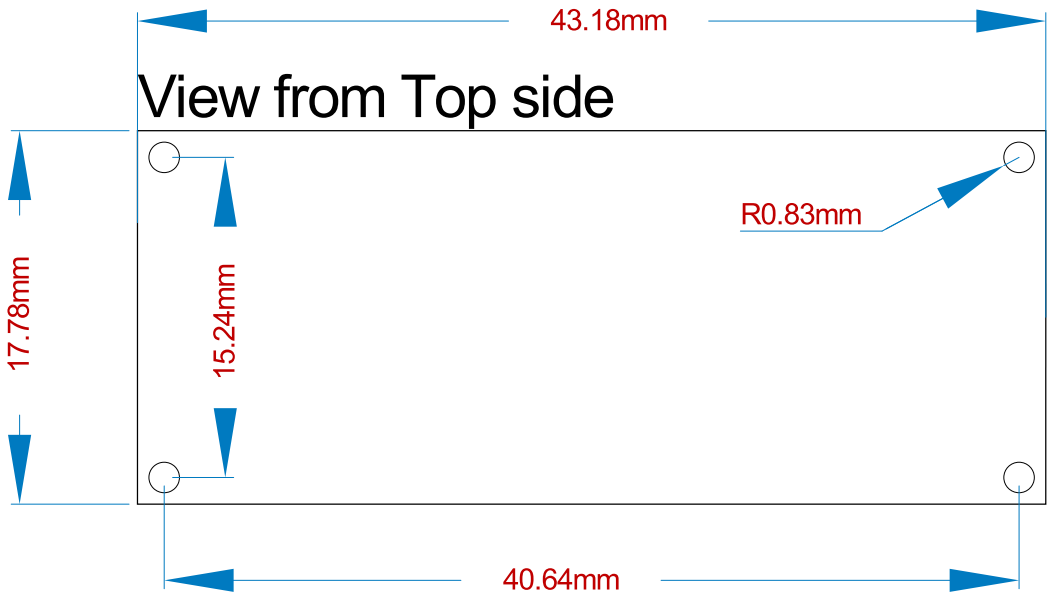

Nano ESP32 机械视图

36 电路板操作

36.1 入门指南 - IDE

如需在离线状态下对 Nano ESP32 进行编程，则需要安装 Arduino IDE **[1]**。若要将 Nano ESP32 连接到计算机，则需要使用 Type-C® USB 电缆，如 LED 指示灯 (DL1) 所示，该电缆还可以为电路板供电。

36.2 入门指南 - Arduino Cloud Editor

包括本电路板在内的所有 Arduino 电路板，都可以在 Arduino Cloud Editor **[2]**上开箱即用，只需安装一个简单的插件即可。

Arduino Cloud Editor 是在线托管的，因此它将始终提供最新功能并支持所有电路板。接下来**[3]**开始在浏览器上编码并将程序上传到您的电路板上。

36.3 入门指南 - Arduino Cloud

Arduino Cloud 支持所有 Arduino 支持 IoT 功能的产品，让您可以记录、绘制和分析传感器数据，触发事件，实现家庭或企业自动化。

36.4 在线资源

现在，您已经了解该电路板的基本功能，就可以通过查看 Arduino Project Hub **[4]**、Arduino Library Reference **[5]** 和在线商店 **[6]** 上的精彩项目来探索它所提供的无限可能性；在这些项目中，您可以为电路板配备传感器、执行器等。

36.5 电路板恢复

所有 Arduino 电路板都配置有内置的引导加载程序，可以通过 USB 对电路板进行刷新。如果某一程序锁定了处理器，且无法通过 USB 再次访问电路板，则可以在上电后立即双击复位按钮进入引导加载程序模式。

认证

37 符合性声明 CE DoC（欧盟）

我们在此郑重声明，上述产品符合以下欧盟指令的基本要求，因此有资格在包括欧盟（EU）和欧洲经济区（EEA）在内的市场内自由流通。

38 声明符合欧盟 RoHS 和 REACH 211 01/19/2021

Arduino 电路板符合欧洲议会关于限制在电子电气设备中使用某些有害物质的 RoHS 2 指令 2011/65/EU 和欧盟理事会于 2015 年 6 月 4 日颁布的关于限制在电子电气设备中使用某些有害物质的 RoHS 3 指令 2015/863/EU。

物质	最大限值（ppm)
铅 (Pb)	1000
镉 (Cd)	100
汞（Hg）	1000
六价铬（Cr6+）	1000
多溴联苯（PBB）	1000
多溴联苯醚（PBDE）	1000
邻苯二甲酸二 (2-乙基己) 酯 (DEHP)	1000
邻苯二甲酸丁苄酯（BBP）	1000
邻苯二甲酸二丁酯（DBP）	1000
邻苯二甲酸二异丁酯（DIBP）	1000

豁免：未申请任何豁免。

Arduino 电路板完全符合欧盟法规 (EC) 1907/2006 中关于化学品注册、评估、许可和限制 (REACH) 的相关要求。我们声明，所有产品（包括包装）中的 SVHC (https://echa.europa.eu/web/guest/candidate-list-table), （欧洲化学品管理局目前发布的《高度关注物质候选授权清单》）含量总浓度均未超过 0.1%。据我们所知，我们还声明，我们的产品不含 ECHA（欧洲化学品管理局）1907/2006/EC 公布的候选清单附件 XVII 中规定的“授权清单”（REACH 法规附件 XIV）和高度关注物质 (SVHC) 所列的任何物质。

39 冲突矿产声明

作为电子和电气元件的全球供应商，Arduino 意识到我们有义务遵守有关冲突矿产的法律法规，特别是《多德-弗兰克华尔街改革与消费者保护法案》第 1502 条。Arduino 不直接采购或加工锡、钽、钨或金等冲突矿物。冲突矿物以焊料的形式或作为金属合金的组成部分存在于我们的产品中。作为我们合理尽职调查的一部分，Arduino 已联系供应链中的元件供应商，以核实他们是否始终遵守法规的相关规定。根据迄今收到的信息，我们声明我们的产品中含有来自非冲突地区的冲突矿物。

40 FCC 警告

任何未经合规性负责方明确批准的更改或修改都可能导致用户无权操作设备。

本设备符合 FCC 规则第 15 部分的规定。操作须满足以下两个条件：

(1) 此设备不会造成有害干扰

(2) 此设备必须接受接收到的任何干扰，包括可能导致不良操作的干扰。

FCC 射频辐射暴露声明

1. 此发射器不得与任何其他天线或发射器放置在同一位置或同时运行。
2. 此设备符合为非受控环境规定的射频辐射暴露限值。
3. 安装和操作本设备时，辐射源与您的身体之间至少应保持 20 厘米的距离。

注: 本设备已经过测试，符合 FCC 规则第 15 部分对 B 类数字设备的限制。 这些限制旨在为住宅安装提供合理保护，防止有害干扰。本设备会产生、使用和辐射射频能量，如果不按照说明安装和使用，可能会对无线电通信造成有害干扰。但是，不能保证在特定安装环境中不会产生干扰。如果本设备确实对无线电或电视接收造成有害干扰，可通过关闭再打开本设备来确定，建议用户采取以下一项或多项措施来消除干扰：

- 调整接收天线的方向或位置。
- 增加设备与接收器之间的距离。
- 将设备连接到与接收器连接的电路不同的插座上。
- 向经销商或有经验的无线电/电视技术人员寻求帮助。

English: User manuals for licence-exempt radio apparatus shall contain the following or equivalent notice in a conspicuous location in the user manual or alternatively on the device or both. This device complies with Industry Canada licence-exempt RSS standard(s). Operation is subject to the following two conditions:

(1) this device may not cause interference

(2) this device must accept any interference, including interference that may cause undesired operation of the device.

French: Le présent appareil est conforme aux CNR d'Industrie Canada applicables aux appareils radio exempts de licence. L'exploitation est autorisée aux deux conditions suivantes :

(1) l' appareil nedoit pas produire de brouillage

(2) l'utilisateur de l'appareil doit accepter tout brouillage radioélectrique subi, même si le brouillage est susceptible d'en compromettre le fonctionnement.

IC SAR 警告:

English This equipment should be installed and operated with a minimum distance of 20 cm between the radiator and your body.

French: Lors de l' installation et de l' exploitation de ce dispositif, la distance entre le radiateur et le corps est d 'au moins 20 cm.

重要提示: EUT 的工作温度不能超过 85°C，也不能低于 -40°C。

Arduino S.r.l. 特此声明，本产品符合 201453/EU 指令的基本要求和其他相关规定。本产品允许在所有欧盟成员国使用。

41 SRRC

本设备包含型号核准代码为：CMIIT ID: 24J993CLD252 的无线电发射模块。

42 公司信息

公司名称	**Arduino S.r.l.**
公司地址	Via Andrea Appiani, 25 Monza, MB, 20900 Italy

43 参考资料

参考资料	链接
Arduino IDE (Desktop)	https://www.arduino.cc/en/Main/Software
Arduino Cloud Editor	https://create.arduino.cc/editor
Cloud Cloud Editor - 入门指南	https://docs.arduino.cc/cloud/web-editor/tutorials/getting-started/getting-started-web-editor
Arduino Project Hub	https://create.arduino.cc/projecthub?by=part&part_id=11332&sort=trending
库参考	https://github.com/arduino-libraries/
在线商店	https://store.arduino.cc/

44 变更日志

日期	变更
2023/08/06	发布
2023/09/01	更新电源树流程图。
2023/09/11	更新 SPI 部分，更新模拟/数字引脚部分。
2023/11/06	更正公司名称，更正 VBUS/VUSB
2023/11/09	方框图更新，天线规格
2023/11/15	环境温度更新
2023/11/23	为 LP 模式添加了标签
2024/02/23	在方框图中添加了天线频率
2024/08/23	SRRC 认证
2024/09/05	从web编辑器更新为云编辑器